SIEMENS

3877

3877P01

RXL

Room controllers

RXL21.1
RXL22.1

Communicating controllers
for fan-coil applications FC-10, FC-11, FC12

The RXL21.1 and RXL22.1 room controllers are used for temperature control in individual rooms.

- **For 2-pipe or 4-pipe fan-coil systems, with or without change-over**
- **PI control**
- **Proprietary bus communication**
- **Integration into the DESIGO building automation and control system via PX KNX**
- **Integration into Synco**
- **Control of AC 24 V PDM [1] thermic valve actuators, 3-position AC 24 V motorized valve and damper actuators, or electric heating coils**
- **Volt-free relay contacts for control of fans and electric heating coils**
- **Commissioning with Synco ACS or "HandyTool"**
- **AC 24 V operating voltage**
- **Screw terminals**

1) PDM = Pulse Duration Modulation

Application

The RXL21.1 and RXL22.1 room controllers are optimized for control of fan-coil systems in individual rooms.
The following options are available with fan-coil systems:

- RXL21.1: Single-speed to 3-speed automatic fan control
- RXL22.1: Single-speed to 3-speed automatic fan control with integrated relay for electric re-heater

The application of each controller is determined by the application software.

The controllers are delivered with a fixed set of applications, each of which contains various individual applications. The relevant application is selected and activated during commissioning using one of the following tools:

- Synco ACS
- "HandyTool" (the QAX34.3 room unit includes a tool function which allows you to set the parameters of the connected RXL cotroller)

No use of spare inputs/outputs

Unlike the RXB controllers, the RXL controllers do NOT support the use of spare inputs and outputs by the building automation and control system.

Functions

The room controller functions are determined by the selected application and its parameters, and by the input/output configuration.

For details, refer to the FNC description of functions, document CA110785.

When DESIGO RXL controllers are integrated into a building automation and control system, or into a Synco system, additional functions become available such as time scheduling, central control of setpoints, etc.

Applications

The following applications are available for the RXL2… room controllers:

Application group (type)	Fan-coil applications	
FC-10 (with RXL21.1)	FNC02	2-pipe system with changeover
	FNC04	4-pipe system
	FNC08	4-pipe system and room/supply air cascade control
	FNC20	4-pipe system with single damper control
FC-11 (with RXL21.1)	FNC10	2-pipe system with changeover and outside air damper
	FNC12	4-pipe system with outside air damper
	FNC10	2-pipe system with changeover and radiator
FC-12 (with RXL22.1)	FNC03	2-pipe system with changeover and electric re-heater
	FNC05	4-pipe system with electric re-heater

Note Only one application at a time can be activated with the tool (Synco ACS or "HandyTool").

Types

The RXL21.1 and RXL22.1 room controllers differ only in the number of outputs available:

Type	AC 24 V triac outputs	Relay outputs
RXL21.1	For 2 thermic valve actuators or two 3-position actuators	For 3-speed fan control
RXL22.1	For 2 thermic valve actuators or one 3-position actuator	For 3-speed fan control; internal relay for electric heating coil
RXZ20.1	Accessories: Terminal covers	

Ordering

When ordering please specify the quantity, product name, type code and application group.

Example: **30 Room controllers, type RXL21.1/FC-10**

Compatibility

The RXL2… room controller is compatible with field devices from Siemens Building Technologies.

For details, refer to the DESIGO RX hardware overview, CA2N3804.

Design

The RXL2... controllers consist of a housing base, a housing cover and the printed circuit board with connection terminals. The controllers also have a tool socket, a service LED and a programming pin.

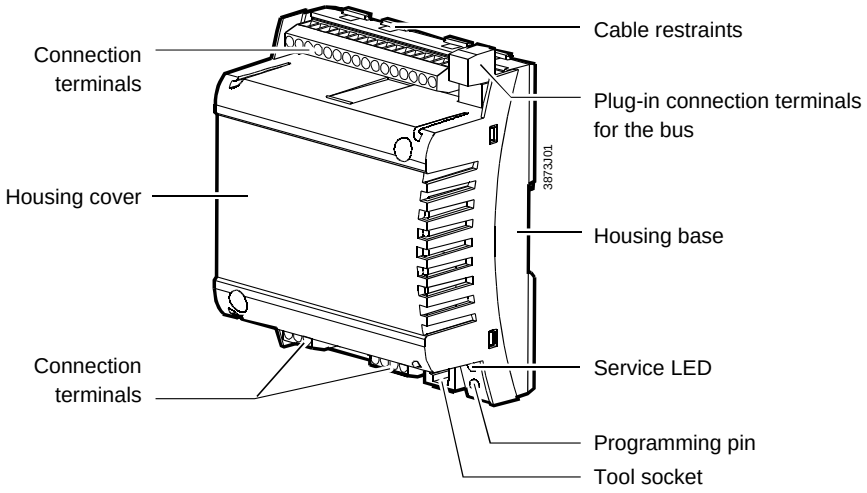

Service LED

The red / green programming LED shows the operational status of the room controller as follows:

Green flashing	OK, device is in operation
Red ON	• Addressing mode • Fault
Red flashing	Fault
OFF	• No supply voltage • Fault • Programming LED disabled by software

Programming pin

The programming pin is used to identify the controller in the commissioning phase.

Pressing this pin causes the red programming LED to light up and remain on until identification of the controller is complete.

Once the service pin has been pressed, the tool overwrites the hardware address in the room controller.

Note!

If there are no terminal covers fitted, the service pin may be operated only by a qualified electrician.

The adjacent terminal may be a live mains voltage conductor.

Terminal cover

Terminal covers (RXZ20.1) are available as an option, to protect the connection terminals from physical contact and dirt. The service LED remains visible when the terminal covers are in place, and the service pin can be operated with a pointed implement. The cable is connected to the room controller by breaking out the perforated cable entry guide.

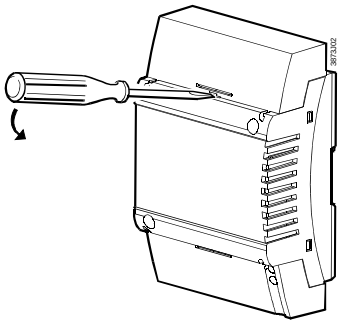

Removing the terminal cover

Label (example for RXL21.1)

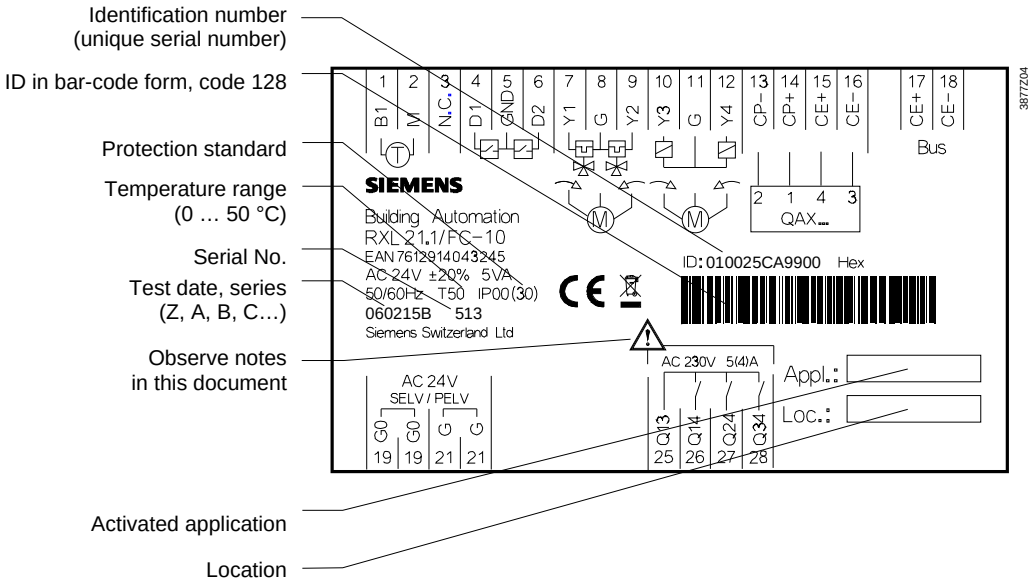

Note

Options for use of the labeling fields “Appl.” and “Loc.”:

- Handwritten identification of the location and the activated application group.

Connection terminals

The connection terminals for the bus are detachable plug-in screw-terminals. All other terminals are fixed. To avoid incorrect wiring, terminals which can be connected to AC 230 V (relay outputs) are physically separate from the other terminals.

Note!

The cable restraints on the housing base *must* be used for the connections to terminals 22 … 28 (AC 230 V). The conductors must be secured with cable ties (see diagram).

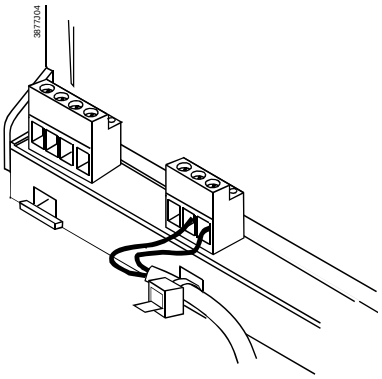

Communication

The RXL2… controllers communicate with other devices via the following interfaces:

- PPS2 interface (proprietary) for the exchange of data with the room units
- Bus (terminals CE+ and CE-) for communication with:
  - PX/KNX interface (to DESIGO INSIGHT)
  - Interface OCI700 (to Synco)
  - Other DESIGO RXL controllers

Note!

The tool socket (RJ45) must be connected only by a qualified electrician. The adjacent terminal may be a live mains voltage conductor.

Connecting the tool

To facilitate commissioning, the tool Synco ACS can be connected at three different points (marked (**A**) in the diagram) in the plant:

- to the bus cable at any point
- to the RXL2… controller (RJ45 tool socket)
- to the room unit (RJ45 tool socket)

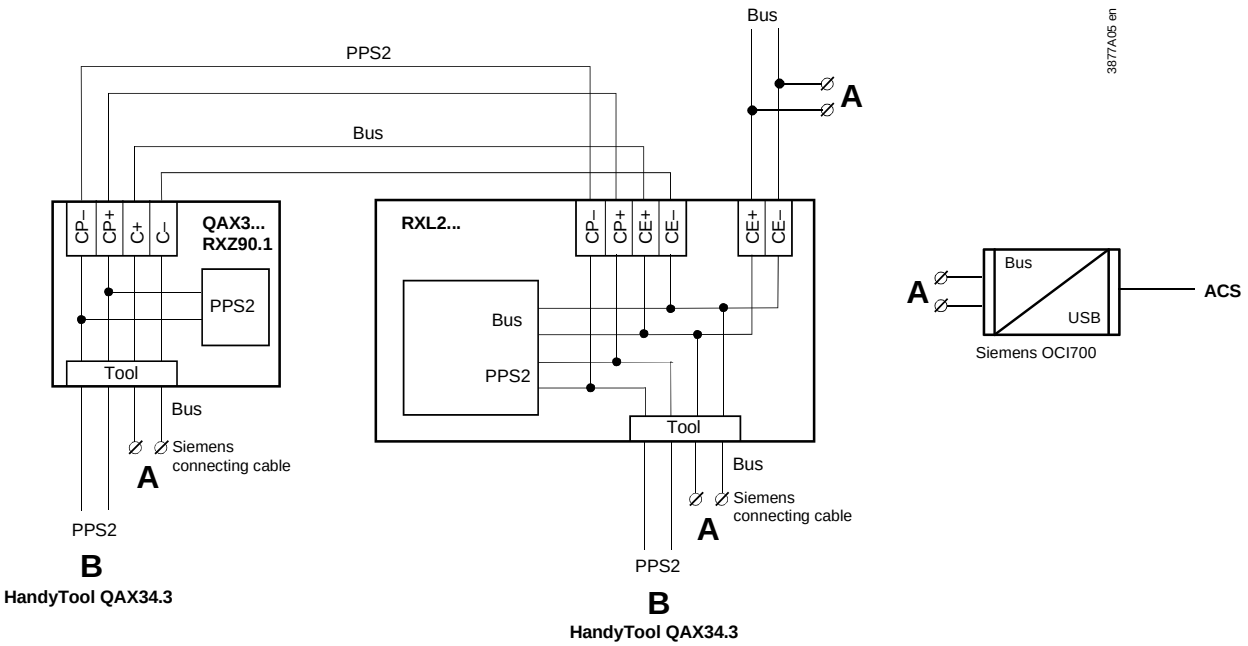

Notes

Caution!

- The tool socket is a proprietary socket.
  A Siemens connecting cable must be used (e.g. PXA-C1).
  When connected to Ethernet, the device on the other end may be damaged!
- The ACS tool, even if connected to a tool socket, requires an interface (OCI700).
- The "HandyTool" is connected to the tool socket of the room controller or to the tool socket of the room unit (QAX3…, RXZ90.1) (**B**).
- If you use OCI700 as an interface, it is connected to the service plug of the controller or of the room unit.
  As long as the OCI700 is connected to the service plug, it must be supplied by the computer via the USB interface. Otherwise the LCD display of the room unit will turn dark and the controller will switch to addressing mode.

Disposal

The device includes electrical and electronic components and must not be disposed of as domestic waste.

Current local legislation must be observed.

Engineering notes

Bus

Topology	Line or star NO closed loops
Cable length	Max. 1000 m
Cable length	E.g. YCYM 2 x 2 x 0.8 mm
number of RXL Controllers per Network	Max. 45
Bus supply	Up to 45 RXL-controllers: ACX95.320/ALG or 5WG1 125-1AB11
Bus terminator	Not required

AC 24 V supply cables

- The RXL2… room controllers operate with a supply voltage of AC 24 V.
- The controlled devices (valves and damper actuators) receive their power directly from the room controller. This means that a separate AC 24 V supply is not necessary for the field devices.
- The sizing and fuse protection of the power supply cables depends on the total load and on local regulations.

Volt-free relay outputs AC 230 V

- The volt-free relay outputs allow the switching of loads up to AC 250 V, 5 A (4 A).
  The heating coil relay in the RXL22.1 switches resistive loads up to 1.8 kW.
  The cable dimensions depend on the connected load and the local installation regulations.
- The circuits must be externally fused (≤ 10 A) as there are no internal fuses.
- The cables connected to the room controller must be secured with cable restraints.

Note!

The fans must <u>not</u> be connected in parallel.

AC 24 V triac outputs

The **simultaneous** load on outputs Y1 … Y4 must not exceed 9.5 VA.

Example:

Y1 (heating)	2 thermic valve actuators, type STP72E	5 W
Y2 (cooling)	2 thermic valve actuators, type STP72E	5 W
Y3, Y4 (outside air)	3-position damper actuator 4.5 VA	4.5 VA

The maximum load is 9.5 VA for the heating sequence and 9.5 VA for the cooling sequence.
This is acceptable because the two sequences never operate at the same time.

Mounting instructions

The room controllers can be mounted in any orientation, and fixed as follows:

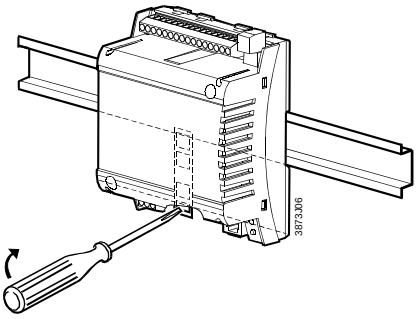

Rail mounting
The housing base is designed for snap-mounting on DIN rails, type EN50022-35 x 7.5 (can be released with a screwdriver).

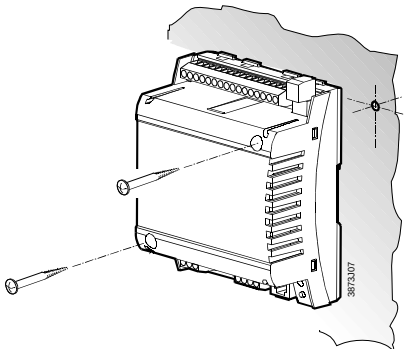

Surface mounting
There are two drill holes for screw-mounting (see “Dimensions” for drilling template). The housing base is fitted with raised supports. Screws: Max. diameter 3.5 mm, min. length 38 mm

Note!

Tightening torque for fixing screws max. 1.5 Nm

When mounting note the following:

- The controller should not be freely accessible after mounting. It must be mounted in a cabinet or behind a cover that can only be opened / removed with a key or a tool.
- Ensure adequate air circulation to dissipate heat generated during operation.
- Easy access is required for service personnel
- Local installation regulations must be observed.

Mounting instructions and a drilling template are printed on the controller packaging.

Commissioning

The RXL2... room controllers are commissioned with one of the following tools:

- Synco ACS via the OCI700 interface
- HandyTool" via PPS2

Labeling

The definitive application and the controller's location are handwritten in the labeling fields "Appl." and "Loc" in the commissioning stage.

Function test

A special test mode (HandyTool) is available for operation of the outputs and interrogation of the inputs.

Technical data

⚠ **Power supply**	Operating voltage	AC 24 V ± 20 % (SELV, PELV)
	Frequency	50/60 Hz
	Power consumption with connected field devices	Max. 15 VA (RXL21.1) Max. 16 VA (RXL22.1)
	Internal fuse	None
Operating data	Control algorithm	PI
Inputs		
Signal inputs D1, D2	Quantity	2
(for volt-free contacts)	Contact voltage	DC 16 V
	Contact current	DC 5 mA
	Contact transfer resistance	Max. 100 Ω
	Contact insulation resistance	Min. 50 kΩ
	Switch time:	min. 20ms “ON”, min. 20ms “OFF”
Measured value input B1	Compatible temperature sensors	LG-Ni 1000
	Quantity	1
	measuring range	0 ... 50 °C
	Sensor current	0.5 mA
	Resolution	0.1 K
	Measuring error at 25 °C sensor temp. (without cable)	max. 0.5 K
Outputs		
AC24 V triac outputs , Y1 … Y4	Quantity	4 (RXL21.1) 2 (RXL22.1)
	Output voltage (equal to supply voltage)	AC 24 V ON/OFF, PWM or 3-position
	Output current	Max. 0.5 A
	Total nominal load (at both outputs simultaneously)	Max. 9.5 VA (e.g. 2 thermic valves, type STP72E per heating and cooling sequence + 1 damper actuator 4.5 VA)
⚠ Relay outputs Q14, Q24, Q34	Quantity	3
	Relay type	Monostable
	Contact rating with AC voltage	
	Switching voltage	Max. AC 250 V, min. AC 19 V
	Nominal current, resistive/inductive	Max. AC 5 A/4 A (cos φ = 0.6)
	Making current 200 ms half-time	Max. 20 A
	Switching current at AC 29 V	Min. AC 10 mA
	Contact rating with DC voltage	
	Switching voltage	Max. DC 250 V, min. DC 5 V
	Switching current at DC 5 V	Min. DC 100 mA
	Switching capacity	Max. 20 W
	Inductive load L/R	Max. 7 ms
Q44	Relay type	Monostable
	Contact rating with AC voltage	
	Max. admissible load (resistive only)	Max. 1.8 kW
	External fuse (essential)	Max. 10 A
Ports/interfaces		
Interface to room unit	Number of room units connectable	1
	Interface type for room unit	PPS2
	for ACS	Bus
	PPS2 baud rate	4.8 kbit/s
	Baud rate on the bus	9.6 kbit/s
Bus	Interface type	Electrically isolated
	Bus current	5 mA
	Baud rate bus	9.6 kbit/s
	Bus topology	Refer to Engineering, page 7

Cable connections	Connection terminals for signals and power supply	Solid or stranded conductors 0.25 … 2.5 mm^2 or 2 x 1.5 mm^2
	Bus connection terminals (plug-in screw terminals)	Solid or stranded conductors 2 x max. 1.0 mm^2 e.g. YCYM 2x2x0.8
	Single cable lengths	For field devices, see also the RXC installation guide, CA110334
	Signal inputs D1, D2	Max. 100 m with diameters ≥ 0.6 mm
	Measured value input B1	Max. 100 m
	AC24 V triac outputs , Y1 … Y4	Max. 100m where A ≥ 1.5 mm^2
	Relay outputs Q14, Q24, Q34, Q44	Depends on load and local regulations
	Interface to room unit	Max. 115 m where A= 0.75 mm^2 (including connecting cable for tool)
	Cable type	4-core, twisted pair, unscreened
	Bus	Max. 500 m (see Engineering, page 7)
	Tool connecting cable	Max. 3 m
Housing protection standard	Protection standard to EN 60529	IP30 with terminal cover fitted and wall mounted without DIN rail IP00 for all other mounting arrangements
Protection class	Suitable for use in systems with protection class I or II	
Ambient conditions	Normal operation	Class 3K5 to IEC 60721-3-3
	Temperature	0 ... 50 °C
	Humidity	< 85 % rh
	Transport	Class 2K3 to IEC 60721-3-2
	Temperature	– 25 ... 65 °C
	Humidity	< 95 % rh
Industry standards	Product safety	
	Automatic electronic controls for household and similar use	EN 60730-1
	Special requirements for energy regulators	EN 60730-2-11
	Electromagnetic compatibility	
	Interference immunity in industrial environment	EN 61000-6-2
	Emitted interference in domestic environment	EN 61000-6-3
	CE marking:	
	EMC Directive	89/336/EEC
	Low Voltage Directive	73/23/EEC
	Home and Building Electronic Systems (HBES)	EN 50090-2-2
Dimensions	See dimension diagrams	
Weight	excluding packaging	0.300 kg
	including packaging	0.340 kg

RXL21.1

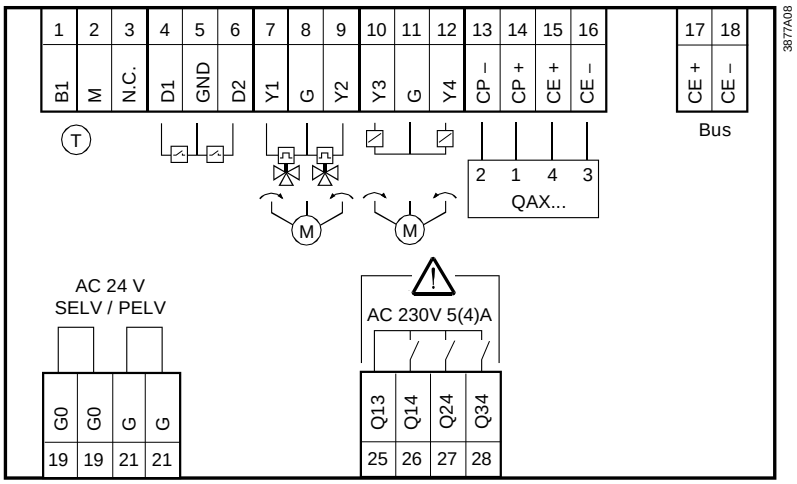

Measured value input

B1	1	Measured value input for LG-Ni 1000 sensors
M	2	Measured value input ground

Signal inputs

D1	4	Signal input
GND	5	Signal ground
D2	6	Signal input

Triac outputs

Y1	7	AC 24 V, 0.5 A switching output
G	8	AC 24 V actuator supply
Y2	9	AC 24 V, 0.5 A switching output
Y3	10	AC 24 V, 0.5 A switching output
G	11	AC 24 V actuator supply
Y4	12	AC 24 V, 0.5 A switching output

Room unit

CP–	13	PPS2 ground
CP+	14	PPS2 data
CE+	15	Bus
CE–	16	Bus

Bus (plug-in connection)

CE+	17	Bus
CE–	18	Bus

Power supply

G0	19	Controller ground
G	21	AC 24 V +/- 20 %

Relay outputs

Q13	25	Common feed for Q14, Q24 and Q34
Q14	26	Normally-open contact, max. AC 250 V, 5 (4) A (Stage 1)
Q24	27	Normally-open contact, max. AC 250 V, 5 (4) A (Stage 2)
Q34	28	Normally-open contact, max. AC 250 V, 5 (4) A (Stage 3)

Caution

- **Observe the technical data for the relay outputs: max. AC 250 V, 5 (4) A**
- **Local installation regulations must be observed.**

Tool socket

Proprietary RJ45-type tool socket

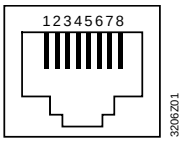

1	Bus (CE+)	5	+12VDC
2	Bus (CE–)	6	RxD
3	Not used	7	PPS2 (CP+) / TxD
4	Not used	8	PPS2 (CP–)

RXL22.1

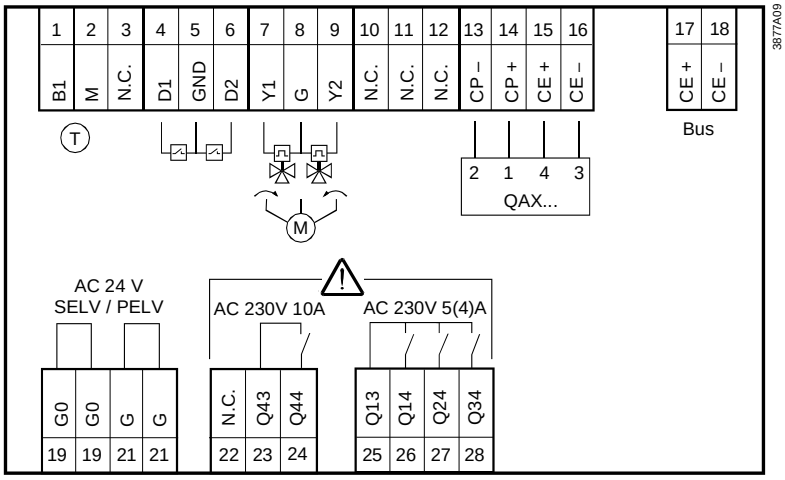

Measured value input

B1	1	Measured value input for LG-Ni 1000 sensors
M	2	Measured value input ground

Signal inputs

D1	4	Signal input
GND	5	Signal ground
D2	6	Signal input

Triac outputs

Y1	7	AC 24 V, 0.5 A switching output
G	8	AC 24 V actuator supply
Y2	9	AC 24 V, 0.5 A switching output

Room unit

CP–	13	PPS2 ground
CP+	14	PPS2 data
CE+	15	Bus
CE–	16	Bus

Bus (plug-in connection)

CE+	17	Bus
CE–	18	Bus

Power supply

G0	19	Controller ground
G	21	AC 24 V +/- 20 %

Relay outputs

Q13	25	Common feed for Q14, Q24 and Q34
Q14	26	Normally-open contact, max. AC 250 V, 5 (4) A (Stage 1)
Q24	27	Normally-open contact, max. AC 250 V, 5 (4) A (Stage 2)
Q34	28	Normally-open contact, max. AC 250 V, 5 (4) A (Stage 3)
Q43	23	Lead wire for Q44
Q44	21	N/O contact AC max. 250 V, 10 A...(electric heating coil)

Caution

- **Observe the technical data for the relay outputs: Max. AC 250 V, 5 (4) A and 10 A, respectively**
- **Local installation regulations must be observed.**

Tool socket

Proprietary RJ45-type tool socket

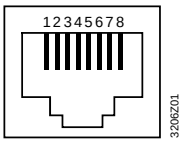

1	Bus (CE+)	5	+12VDC
2	Bus (CE–)	6	RxD
3	Not used	7	PPS2 (CP+) / TxD
4	Not used	8	PPS2 (CP–)

Connection of field devices, room unit, bus and power supply

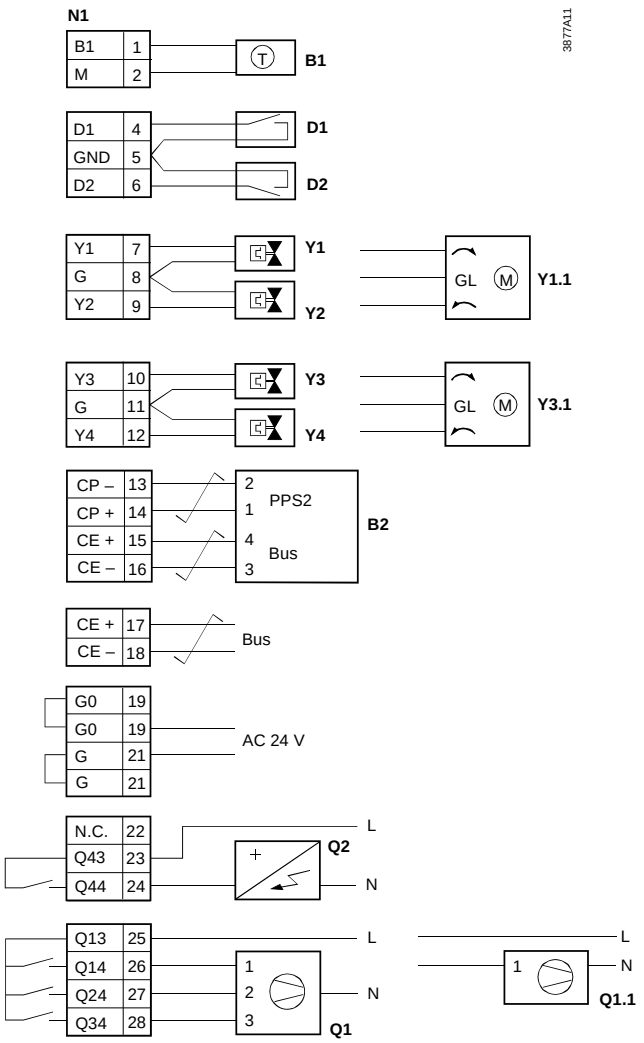

N1	RXL21.1, RXL22.1
B1	LG-Ni 1000 temperature sensor
D1, D2	Volt-free contacts (window contact, occupancy sensor, etc.)
Y1...Y4	AC 24 V thermic valve actuators
Y1.1	Motorized AC 24 V, 3-position valve or damper actuator
Y3.1	Motorized AC 24 V, 3-position valve or damper actuator
B2	QAX3… room unit
Q1	3-speed fan
Q1.1	1-speed fan
Q2	Electric heating coil

Twisted pair

Note!

- **Fans connected to relay outputs Q14 … Q34 must not be operated in parallel. For parallel operation use cut-off relays or slave room controllers.**
- **At Q2 (1.8 kW max. resistive load), use additional external fuses of max. 10 A to protect the pcb tracks.**

Note For information on the compatibility of field devices with the RXL21.1 and RXL22.1 room controller, refer to the various application descriptions (see the FNC description of functions, document CA110785)

Parallel connection of several thermic valve actuators

Up to two thermic actuators per sequence may be connected directly to the room controller. With more than two thermic actuators, a UA1T power amplifier is required.

The principle is the same for output Y2. Do not exceed the maximum simultaneous load on outputs Y1 and Y2 (max. 9.5 VA).

Power consumption at input X1 of the UA1T: 0.5 VA.

Note!

Mixed operation: **It is not permissible to connect thermic actuators both to the controller and to the power amplifier.**
Owing to the difference in voltage between the controller's internal transformer and the power supply of the UA1T, this could cause the valve positions to deviate substantially.

Connection to the controller

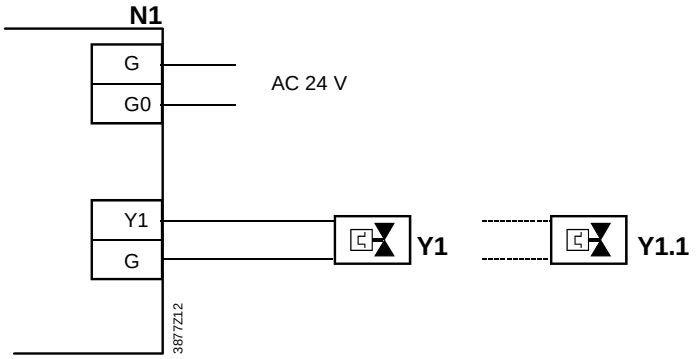

Connection to the power amplifier

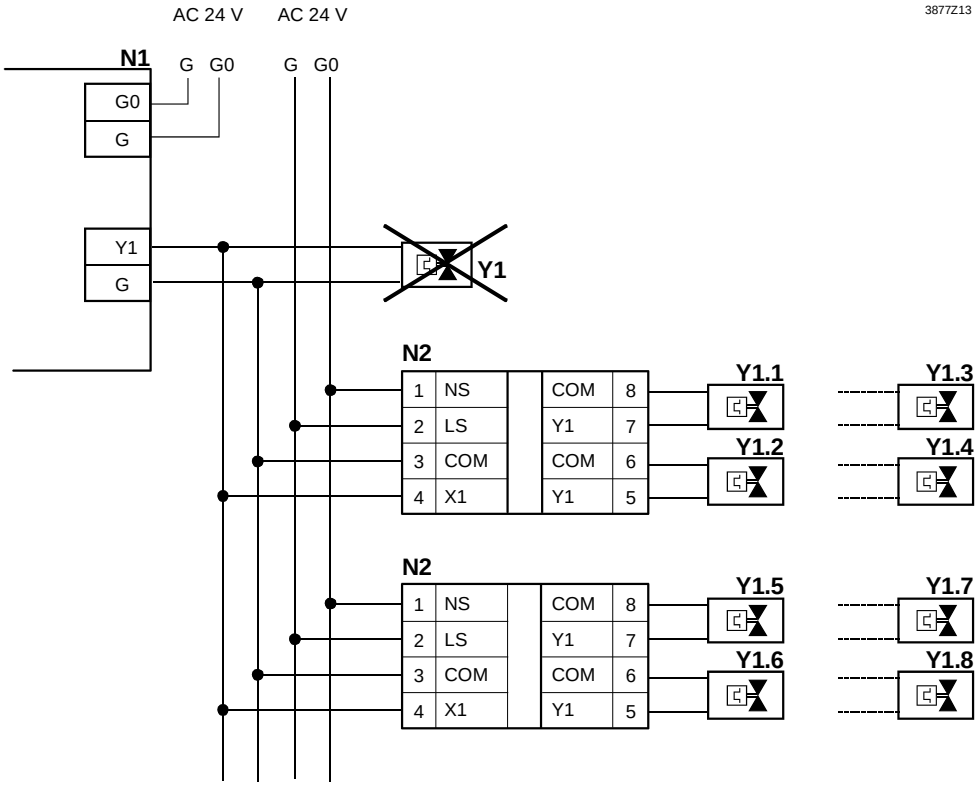

N1	Room controller RXL21.1, RXL22.1
N2	UA1T power amplifier (see data sheet CA2N3591)
Y1	AC 24 V thermic valve actuators connected to the controller
Y1.x	AC 24 V thermic valve actuators (max. 2 STA71/STP71 actuators per Y1 output on the UA1T)

Notes

– The UA1T requires an AC 24 V supply voltage
– The UA1T is *not* suitable for the connection of 3-position actuators.

Dimensions

Dimensions in mm

Without terminal cover

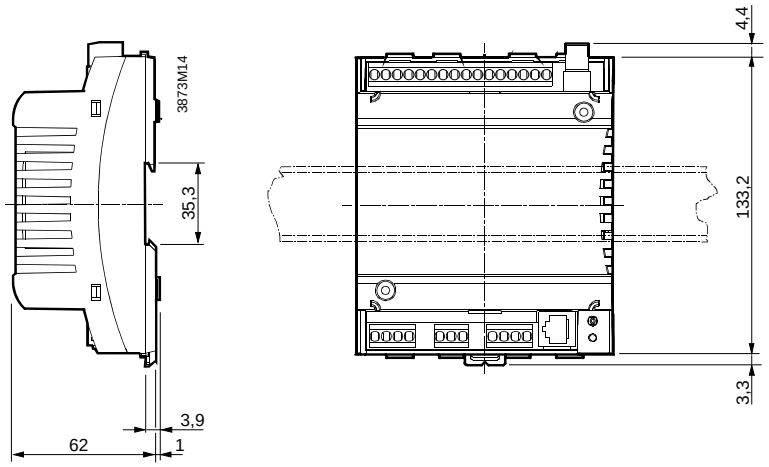

With terminal covers

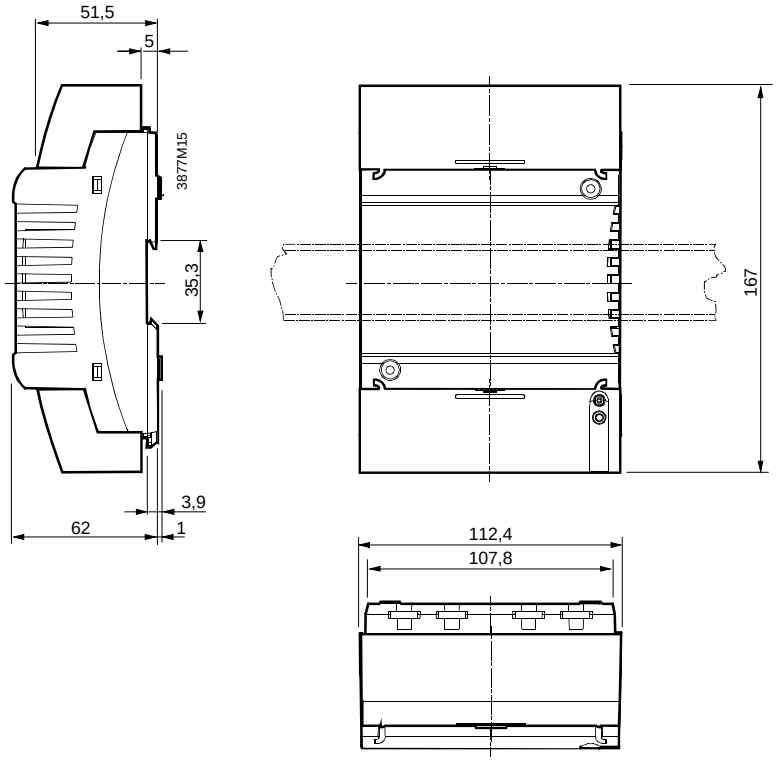

Drilling diagram (1:1)