SIEMENS

3078

Semi Flush-mount Room Temperature Controllers with LCD

RDU340

for VAV heating and cooling systems

- **Modulating PI control**
- **Control depending on the room or the return air temperature**
- **Output for a DC 0…10 V actuator and AC 230V electrical heater (ON-OFF)**
- **Automatic or manual heating/cooling changeover**
- **Operating modes: Comfort, Energy Saving and Protection**
- **Two multifunctional inputs for keycard contact, external sensor, etc.**
- **Adjustable commissioning and control parameters**
- **Minimum and maximum setpoint limitation**
- **Adjustable minimum and maximum limitation for air flow signal DC 0..10V**
- **Output signal inversion as an option**
- **Mounting on recessed rectangular conduit box, 60.3 mm fixing centers**
- **AC 24 V operating voltage**

N3078en
11 July 2008

Building Technologies

Use

Control of the room temperature in individual rooms of ventilation or air conditioning plants that are:

- Heated or cooled by single duct.
- Heated or cooled by single duct with electrical heater.

The RDU340 is suitable for use with VAV systems in connection with the VAV compact controllers types G…B181.1E/3.

The RDU340 controls

- One DC 0…10 V actuator
- One DC 0…10 V actuator and AC 230V 1-stage electrical heater

Use in systems with:

- Heating or cooling mode
- Automatic heating/cooling changeover
- Manual heating/cooling changeover
- Heating and cooling single duct (single duct with electrical heater)

Functions

- Maintain room temperature via built-in temperature sensor or external room temperature / return air temperature sensor
- Automatic or manual changeover between heating and cooling mode
- Select applications via DIP switches
- Select operating mode via the operating mode button on the controller.
- Display current room temperature or setpoint in °C and/or °F.
- Minimum and maximum setpoint limitation.
- Keypad lock (automatic and manual).
- Two multifunctional inputs, freely selectable for:
  - Operating mode switchover contact (key card).
  - Automatic heating/cooling changeover sensor.
  - External room temperature or return air temperature
  - Dewpoint sensor.
  - Electric heater enable.
  - Alarm input.
- Reminder to clean filters.
- Minimum and maximum limitation of air flow signal DC 0..10V
- Floor heating temperature limit.
- Reload factory settings for commissioning and control parameters.

Applications

Prior to snapping the front panel to the base, use the DIP switches on the inner side of the front panel to commission the controller applications and the behavior of the output signal.

DIP switch number	**1**	**2**
Application		
Single duct heating or cooling (factory setting)	OFF	n.a.
Single duct heating and cooling, with electrical heater	ON	n.a.
DC 0…10 V output signal normal (factory setting)	n.a.	OFF
DC 0…10 V output signal inverted (see section **Fehler! Verweisquelle konnte nicht gefunden werden.**)	n.a.	ON

Note: During startup, the controller reloads the control parameter factory settings after each DIP switch settings change.

Type summary

Type reference	**Operating Voltage**	**Control output**			**LCD Backlight**	**Infrared receiver**	**Housing Colour**
		3 pt	on/off	DC 0..10 V			
RDU340	AC 24 V	**--**	✓	✓			white

Equipment combinations

	Type of unit		Type reference	Data Sheet
	Cable temperature sensor		**QAH11.1**	1840
	Room temperature sensor		**QAA32**	1747
DC 0..10 V actuator	Electrical actuator, DC 0..10V (for radiator valve)		**SSA61...**	4893
	Electrical actuator, DC 0..10V (for small valve 2,5 mm)		**SSP61…**	4864
	Electrical actuator, DC 0..10V (for small valves 5.5 mm)		**SSB61...**	4891
	Electromotoric actuator, DC 0..10V (for valves 5.5 mm)		**SQS65…**	4573
	Thermal actuator, DC 0..10V (for small valves and radiator valves)		**STS61**	4880
	DC 0…10 V damper actuator		**GQD161…**	4605
			**GDB161…**	4634
			GLB161…	
			**GMA161…**	4614
			GEB161…	4621
			**GCA161…**	4613
			GBB161…	4626
			GIB161…	
	VAV compact controller		**GDB181.1E/3**	3544
			GLB181.1E/3	

Accessories

Type of unit	Type reference	Data Sheet
Changeover mounting kit (50 pcs/package)	**ARG86.3**	1840
Adapter plate 82mm x 82 mm x 10 mm for conduit	**ARG70.3**	-

Ordering

When ordering, indicate both product number and name:

E.g. **RDU340 room temperature controller**

Order valve actuators separately.

Mechanical design

The controller consists of 2 parts:

- Front panel accommodating the electronics, operating elements and built-in room temperature sensor.
- Mounting base with the power electronics.

The rear of the mounting base contains the screw terminals. The base fits on a rectangular conduit box with 60.3 mm fixing centers. Slide the front panel in the mounting base and snap on.

Operation and settings

1. Operating mode selector/Standby
2. Adjust setpoint and control parameters

Display

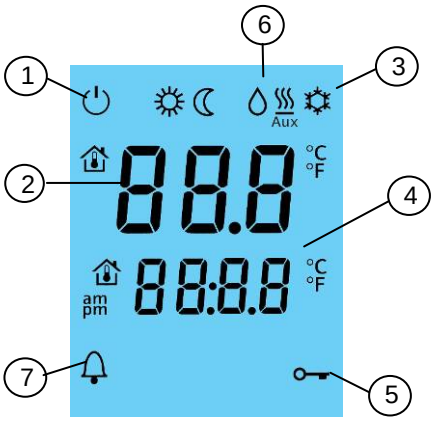

1. Operating mode
   - Standby / protected mode
   - Comfort mode
   - Energy Saving mode
2. Display room temperature, setpoints and control parameters.
   Symbol used to display the current room temperature
3. Heating/cooling mode
   - Cooling mode
   - Heating mode,
   - Aux Electrical heater active
4. Additional user information
5. Keypad lock active
6. Condensation in room (dewpoint sensor active)
7. Indicate alarm or reminder

Mounting and installation

Mount the room controller on a recessed rectangular conduit box with 60.3mm fixing centers. Do not mount on a wall in niches or bookshelves, behind curtains, above or near heat sources, or exposed to direct solar radiation. Mount about 1.5 m above the floor.

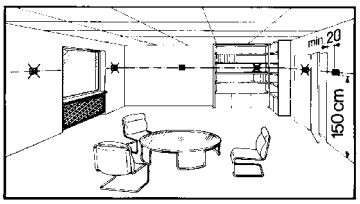

Mounting

⚠

- Devices must be mounted on clean, dry indoor place and not be exposed to dripping or splashing

Wiring

See the mounting instructions M3078 enclosed with the controller.

⚠
⚠
⚠

- Comply with local regulations to wire, fuse and earth the controller.
- Properly size the cables to electrical heater for AC 230 V mains voltage.
- Isolate the cables of SELV inputs X1-M/X2-M if the conduit box carries AC 230 V mains voltage.
- Inputs X1-M or X2-M of different units (e.g. summer/winter switch) may be connected in parallel with an external switch. Consider overall maximum contact sensing current for switch rating.
- No metal conduits
- No cables provided with a metal sheath
- Disconnect from supply before opening the cover

Commissioning

Set the controller application via the DIP switches before snapping the front panel on the mounting base.
After power is applied, the controller carries out a reset during which all LCD segments flash indicating that the reset was correct. After the reset, which takes about 3 seconds, the controller is ready for commissioning by qualified HVAC staff. The control parameters of the controller can be set to ensure optimum performance of the entire system (see basic documentation P3078).

Control sequence

- The control sequence may need to be set via parameter P01 depending on the application. The factory setting for the single duct application is “Cooling only”.

Calibrate sensor

- Recalibrate the temperature sensor if the room temperature displayed on the controller does not match the room temperature measured. To do this, change parameter P05.

Setpoint and range limitation

- We recommend to review the setpoints and setpoint ranges (parameters P08…P12) and change them as needed to achieve maximum comfort and save energy.

Disposal

The device is classified as waste electronic equipment in terms of the European Directive 2002/96/EC (WEEE) and should not be disposed of as unsorted municipal waste. The relevant national legal rules are to be adhered to. Regarding disposal, use the systems setup for collecting electronic waste.
Observe all local and applicable laws.

Technical data

⚠ Power supply	Operating voltage		SELV AC 24 V ±20 %
	Frequency		50/60 Hz
	Power consumption		Max. 8 VA
Outputs	Control output Y10-G0		SELV DC 0…10 V
	Resolution		39 mV
	Current		Max. ±1 mA
	Control output Y21-L (N.O.)		AC 230 V
	Rating		Max. 5(2) A
Inputs	Multifunctional input X1-M/X2-M		
	Temperature sensor input:	Type	QAH11.1 (NTC)
	Digital input:	Operating action	Selectable (N.O./N.C.)
	Contact sensing		SELV DC 0...5 V/max 5 mA
	Insulation against mains voltage (SELV)		4 kV, reinforced insulation
	Function input: External temperature sensor, heating/cooling changeover sensor, operating mode switchover contact, dewpoint monitor contact, enable electrical heater contact, alarm contact		Selectable
Operational data	Switching differential, adjustable		
	Heating mode	(P30)	2 K (0.5...6K)
	Cooling mode	(P31)	1 K (0.5...6K)
	Setpoint setting and range		
	☼ Comfort mode	(P08)	21°C (5...40 °C)
	☾ Energy Saving mode	(P11-P12)	15°C/30°C (OFF, 5...40 °C)
	⏻ Standby	(P65-P66)	8°C/OFF (OFF, 5...40 °C)
	Multifunctional input X1/X2	Selectable 0…6	
	Input X1	Factory setting = 3 (P38)	Operating mode switchover
	Input X2	Factory setting = 2 (P40)	Heat/cool changeover sensor
	Built-in room temperature sensor		
	Measuring range		0…49 °C
	Accuracy at 25 °C		< ± 0.5 K
	Temperature calibration range		± 3.0 K
	Settings and display resolution		
	Setpoints		0.5 °C
	Current temperature value displayed		0.5 °C
Environmental conditions	Operation		As per IEC 721-3-3
	Climatic conditions		Class 3K5
	Temperature		0...+50 °C
	Humidity		<95 % r.h.
	Transport		As per IEC 721-3-2
	Climatic conditions		Class 2K3
	Temperature		−25...+60 °C
	Humidity		<95 % r.h.
	Mechanical conditions		Class 2M2
	Storage		As per IEC 721-3-1
	Climatic conditions		Class 1K3
	Temperature		−25...+60 °C
	Humidity		<95 % r.h.

Standards	CE conformity	
	EMC directive	2004/108/EC
	Low-voltage directive	2006/95/EC
	N474 **C-tick** conformity to	
	EMC emission standard	AS/NSZ 4251.1:1999
	RoHS Reduction of hazardous substances	2002/95/EC
	Product standards	
	Automatic electrical controls for household and similar use	EN 60730–1
	Special requirements for temperature-dependent controls	EN 60730–2-9
	Electronic control type	2.B (microdisconnection on operation)
	Electromagnetic compatibility	
	Emissions	IEC/EN 61000-6-3
	Immunity	IEC/EN 61000-6-2
	Protective class	II as per EN 60730
	Pollution class	Normal
	Degree of protection of housing	IP 30 to EN 60529
General	Connection terminals	Solid wires or prepared stranded wires 1 x 0.4…2.5 mm^2 or 2 x 0.4…1.5 mm^2
	Housing front color	RAL 9003 white
	Weight	0.220 kg

Connection terminals

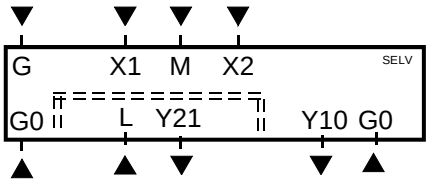

G, G0	Operating voltage controller AC 24 V
L	Operating voltage for electrical heater AC 230 V
Y21	Control output for electrical heater
Y10	Control output for DC 0…10 V actuator
X1, X2	Multifunctional input for temperature sensor (e.g. QAH11.1) or switch
M	Measuring neutral for sensor and switch

Connection diagrams

Application:

Single duct

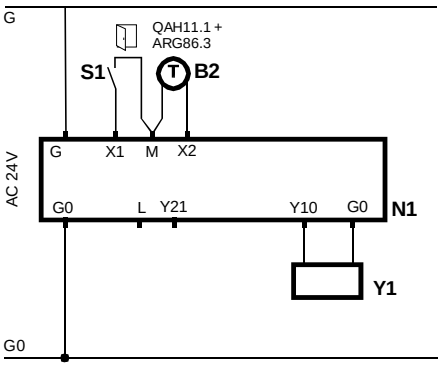

G - G0 AC 24 V

N1	Room temperature controller RDU340
Y1	DC 0-10V actuator for heating or cooling
S1	Operating mode switch-over contact (e.g. key card)
B2	Heat/cool changeover sensor

Application:

Single duct with electrical heater

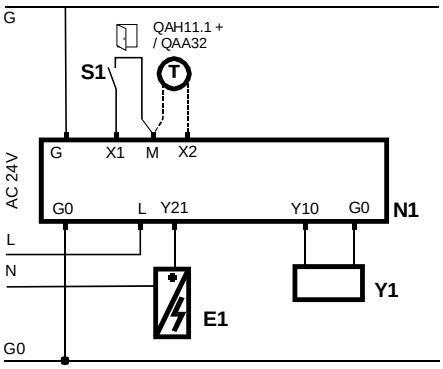

G - G0 AC 24 V

⚠ L - N AC 230 V

N1	Room temperature controller RDU340
Y1	DC 0-10V actuator for heating or cooling
E1	Electrical heater
S1	Operating mode switch-over contact (e.g. key card)
B2	Heat/cool changeover sensor

Dimensions

Dimensions in mm