Rotary actuator for Modbus
for 2- and 3-way control ball valves

- **Torque 10 Nm**
- **Nominal voltage AC/DC 24V**
- **Communication via Modbus RTU (RS-485)**
- **Conversion of sensor signals**
- **NR24A-MOD with cable**
  NR24A-MOD-J6 with socket

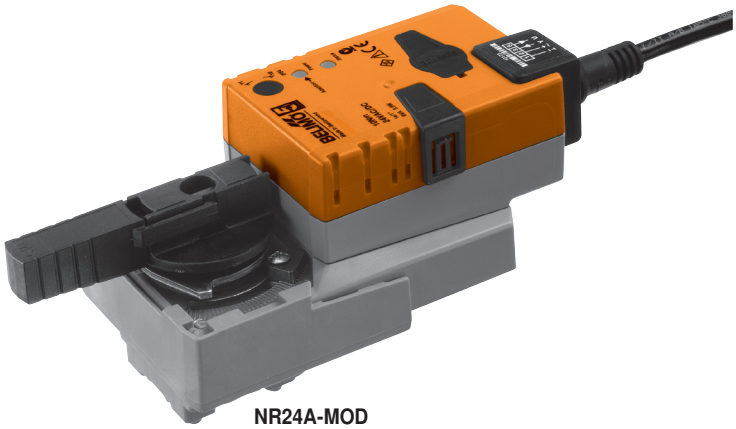

NR24A-MOD

Technical data

Electrical data		
Nominal voltage		AC 24V, 50/60 Hz / DC 24V
Nominal voltage range		AC 19.2 ... 28.8V / DC 21.6 ... 28.8V
Power consumption	In operation	3.5 W @ nominal torque
	At rest	1.3 W
	For wire sizing	6 VA
Connection	NR24A-MOD	Cable 1 m, 6 x 0.75 mm²
	NR24A-MOD-J6	RJ12 socket
Data for Modbus		
Protocol		Modbus RTU (RS-485), not galvanically isolated
Number of nodes		Max. 32 (without repeater)
Transmission formats		1-8-N-2, 1-8-N-1, 1-8-E-1, 1-8-O-1 Default: 1-8-N-2 (start bits, data bits, parity, stop bits)
Baud rates		9 600, 19 200, 38 400, 76 800, 115 200 Bd Default: 38 400 Bd
Scheduling		120 Ω, can be switched
Parameterisation		With the service tool ZTH-GEN, push-button-operated fast addressing 1 ... 16 possible

Functional data	**Factory settings**	**Variable**	**Setting**
Torque (nominal torque)	Min. 10 Nm @ nominal voltage	25%, 50%, 75% reduced	.....
Position accuracy	±5%		
Running time	90 s / 90°∢	43 ... 173 s	.....
Automatic adjustment of running time, control and feedback to match the mechanical angle of rotation	Manual triggering of the adaption by pressing the «Adaption» button or with the PC tool	Automatic adaption whenever the supply voltage is switched on, or manual triggering	.....
Angle of rotation limiting	MAX (maximum position) = 100% MIN (minimum position) = 0% ZS (intermediate position, only AC) = 50%	MAX = (MIN + 30°∢) ... 100% MIN = 0% ... (MAX – 30°∢) ZS = MIN ... MAX	.....
Sound power level	max. 35 dB(A)	With a running time of 43 s = 45 dB(A) 173 s = 35 dB(A)	
Position indication	mechanical, pluggable		

Safety	
Protection class	**III** Safety extra-low voltage
Degree of protection	IP54 in any mounting position (for NR24A-MOD-J6 only with extra protective sleeve)
EMC	CE according to 2004/108/EC
Principle of operation	Type 1 (according to EN 60730-1)
Rated current voltage	0.8 kV (according to EN 60730-1)
Control pollution degree	3 (according to EN 60730-1)
Mediumstemperatur	
Ambient temperature	+0 ... +50°C
Non-operating temperature	–40 ... +80°C
Ambient humidity	95% r.h., non-condensing (according to EN 60730-1)
Maintenance	Maintenance-free

Technical data *(continued)*

Dimensions / Weight

Dimensions	See «Dimensions» on page 8
Weight	Approx. 850 g

Safety notes

- **The actuator has been designed for use in stationary heating, ventilation and air conditioning systems and is not allowed to be used outside the specified field of application, especially in aircraft or in any other airborne means of transport.**
- **It may only be installed by suitably trained personnel. Any legal regulations or regulations issued by authorities must be observed during assembly.**
- **The switch for changing the direction of rotation may only be operated by authorized personnel. The direction of rotation must not be reversed in a frost protection circuit.**
- **The device may only be opened at the manufacturer's site. It does not contain any parts that can be replaced or repaired by the user.**
- **The cable must not be removed from the device.**
- **The device contains electrical and electronic components and is not allowed to be disposed of as household refuse. All locally valid regulations and requirements must be observed.**

Product features

Principle of operation
The actuator is fitted with an integrated interface for Modbus RTU, receives its digital positioning signal from the superordinate Modbus-Master and returns the current status.

Converter for sensors
Connection option for a sensor (passive or active sensor or switching contact). In this way, the analogue sensor signal can be easily digitised and transferred to Modbus.

Parameterisable actuators
The factory settings cover the most common applications. As desired, individual parameters can be adapted for specific systems or servicing with a service tool (e.g. ZTH-GEN).
The Modbus communication parameters (address, baud rate, …) are set with the ZTH-GEN.
Pressing push-button 3 while connecting the supply voltage resets the communication parameters to the factory setting.
Quick addressing: The Modbus address can alternatively be set using push-buttons from 1 to 16. The value selected is added to the «Basic address» parameter and results in the effective Modbus address. For example, with a basic address of 140, Modbus addresses between 141 and 156 can be parameterised using quick addressing.

Simple direct mounting
Straightforward direct mounting on the ball valve with only one screw. The assembly tool is integrated in the plug-on position indicator. The mounting position in relation to the ball valve can be selected in 90°∢ steps.

Manual override
Manual override with push-button possible (the gear is disengaged for as long as the button is pressed or remains locked).

Adjustable angle of rotation
Adjustable angle of rotation with mechanical end stops.

High operational reliability
The actuator is overload-proof, requires no limit switches and automatically stops when the end stop is reached.

Home position
When the supply voltage is switched on for the first time, i.e. at commissioning or after pressing the «gear disengagement» switch, the actuator travels to the home position.

Actuator	Valve
Y2	A – AB = 0%

The actuator then moves into the position defined by Modbus-Master.

Modbus overview

Register

	No.	Adr	Register
In operation	1	0	**Setpoint [%]**
	2	1	**Override control**
	3	2	**Command**
	4	3	Actuator type
	5	4	Relative position [%]
	6	5	Absolute position [°] [mm]
	7	6	Relative volumetric flow [%] (only for VAV/EPIV)
	8	7	Absolute volumetric flow (pressure) [m^3/h] [l/min] [Pa] (only for VAV/EPIV)
	9	8	Sensor value [mv] [Ω] [–]
Service	101	100	Series number 1st part
	102	101	Series number 2nd part
	103	102	Series number 4th part
	104	103	Firmware version (Modbus module)
	105	104	Malfunction and service information
	106	105	**Min [%]**
	107	106	**Max [%]**
	108	107	**Sensor type**
	109	108	**Bus fail position**

- Registers in Bold can be written
- Registers <100 (In operation) which can be written are volatile and should therefore be updated periodically
- Registers >100 which can be written are non-volatile

Commands

All data is arranged in a table and addressed by 1..n (register) or 0..n-1 (address). No distinction is made between data types (Discrete Inputs, Coils, Input Registers, Holding Registers). As a consequence, all data can be accessed with the two commands for Holding Register. The commands for Discrete Inputs and Input Registers can be used as an alternative.

Standard commands:
Read Holding Registers [3]
Write Single Register [6]

Optional commands:
Read Discrete Inputs [2]
Read Input Registers [4]
Write Multiple Registers [16]

Note regarding Read Discrete Inputs
The command reads one or more bits and can alternatively be used for register 105 (Malfunction and service information). The start address to be used is 1664.

Modbus register description

Register 1: Setpoint

Setpoint for actuator setting or volumetric flow in hundredths of one percent,
i.e. 0…10 000 corresponds to 0…100%

Register 2: Override control

Overriding the setpoint with defined values

Override control	
0	None
1	Open
2	Close
3	Min
5	Max

Register 3: Command

Initiation of actuator functions for service and test; the register is reset automatically.

Command	
0	None
1	Adaption
2	Test run
3	Synchronisation
4	Reset actuator malfunctions

Register 4: Actuator type

Actuator type; the allocation may deviate from the basic category with some actuators.

Actuator type	
0	Actuator not connected / not known
1	Air/water actuators with/without safety function
2	Volumetric flow controller VAV / EPIV
3	Fire damper actuator

Register 5: Relative position

Relative position in hundredths of one percent,
i.e. 0 … 10 000 correspond to 0 … 100%

Register 6: Absolute position

Absolute position
0 … 10 000 (65535 if not supported by the actuator)
The unit depends on the device:
[°] for actuators with rotary movement
[mm] for actuators with linear movement

Register 7: Relative volumetric flow

Relative volumetric flow in hundredths of one percent of Vnom,
i.e. 0 … 10 000 correspond to 0 … 100%
This value is available only for VAV controllers and EPIV devices (actuator type: 2).
For all other types, 65535 will be entered.

Register 8: Absolute volumetric flow

Absolute volumetric flow
This value is available only for VAV controllers and EPIV devices (actuator type: 2).
For all other types, 65535 will be entered.
The unit depends on the device:
[m^3/h] for VAV controllers (or [Pa] for pressure applications)
[l/min] for EPIV devices

Register 9: Sensor value

Current sensor value; dependent on the setting in Register 108
The unit depends on the sensor type: [mv] [Ω] [-]

Register 101, 103: Series number

Each MP node has an unambiguous series number which is either impressed on or glued to the node. The series number consists of 4 segments, although only parts 1, 2 and 4 are displayed on Modbus.
Example: 00839-31324-064-008

Register 9	Register 10	Register 11
1st part	2nd part	4th part
00839	31234	008

Register 104: Firmware Version

Firmware version of Modbus module (VX.XX)
e.g. 101 V1.01

Modbus register description *(continued)*

Register 105: Malfunction and service information

The status information is split into messages about the actuator (malfunctions) and other service information.

	Bit	Description
Malfunctions (low byte)	0	Excessive utilisation
	1	Mechanical travel increased
	2	Mechanical overload
	3	–
	4	Safety-relevant faults (fire protection only)
	5	Damper test error (fire protection only)
	6	Duct temperature too high (fire protection only)
	7	Smoke detector tripped (fire protection only)
Service (high byte)	8	Internal activity (test run, adaption, …)
	9	Gear disengagement active
	10	Bus watchdog triggered
	11	–
	12	–
	13	–
	14	–
	15	–

The malfunction bits can be reset with Register 3 (command 4) or with the Belimo PC-Tool. Malfunctions 0 and 4 cannot be reset.

Register 106: Min / Vmin setting

Minimum limit (position or volumetric flow) in hundredths of one percent,
i.e. 0…10 000 correspond to 0…100%
Caution: Changing the setting may result in malfunctions.

Register 107: Max / Vmax setting

Maximum limit (position or volumetric flow) in hundredths of one percent,
i.e. 2000…10 000 correspond to 20…100%
Caution: Changing the setting may result in malfunctions.

Register 108: Sensor type

Sensor type connected to the actuator; in the absence of sensor specification, the switching at the Y input will have the effect of a local compulsion.

Sensor type	
0	None
1	Active sensor (mV)
2	Passive sensor 1 k (Ω)
3	Passive sensor 1 … 20 k (Ω)
4	Switching contact (0 / 1)

Note
After changing the sensor type, the actuator must always be restarted in order for correct sensor values to be read out.

Register 109: Bus fail position

Modbus communication is not monitored as standard. In the event of a breakdown in communication, the actuator retains the current setpoint.
The bus monitoring controls the Modbus communication. If neither the setpoint (Register 1) nor the override control (Register 2) is renewed within 120 seconds, the actuator controls to the bus fail position (closed / open).
Triggered bus monitoring is indicated in Register 105.

Bus fail position	
0	Last setpoint (no bus monitoring)
1	Fast close if time is exceeded
2	Fast open if time is exceeded

Electrical installation

Connection diagram for cable layout

Note
Connection via safety isolating transformer.

Note
Modbus signal assignment:
C_1 = D– = A
C_2 = D+ = B

Power supply and communication are not galvanically isolated.
Interconnect ground signal of the devices.

Connection without sensor

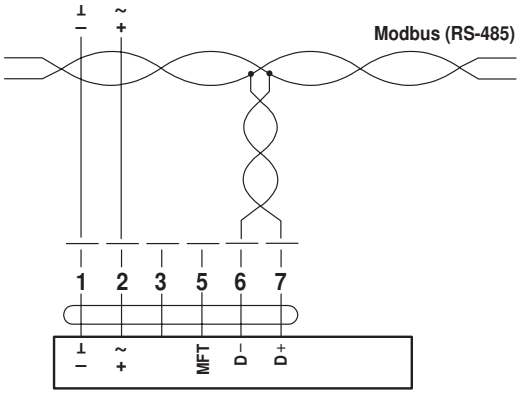

Connection with passive sensor, e.g. Pt1000, Ni1000, NTC

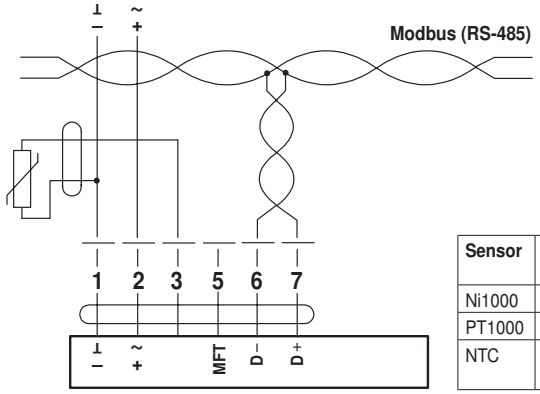

Sensor	Temperature range	Resistance range	Resolution
Ni1000	–28 ... +98°C	850 ... 1600 Ω	1 Ω
PT1000	–35 ... +155°C	850 ... 1600 Ω	1 Ω
NTC	–10 ... +160°C (depending on type)	200 ... 50 kΩ	1 Ω

Connection with switching contact, e.g. Δp-monitor

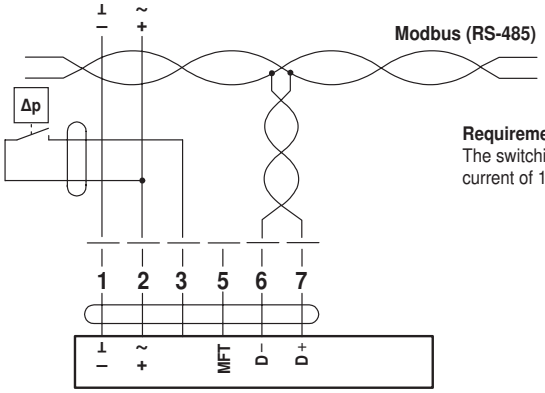

Requirements for switching contact:
The switching contact must be able to accurately switch a current of 16 mA at 24 V.

Connection with active sensor, e.g. 0 ... 10 V @ 0 ... 50°C

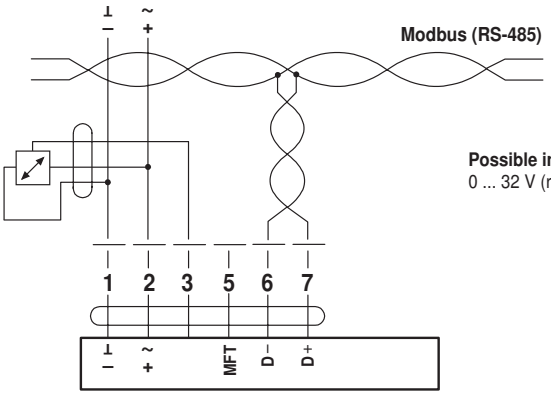

Possible input voltage range:
0 ... 32 V (resolution 30 mV)

Electrical installation *(continued)*

RJ12 socket

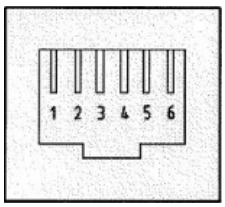

Connection assignment:
Pin 1: AC/DC 24V
Pin 2: GND
Pin 3: D– (A)
Pin 4: D+ (B)
Pin 5: AC/DC 24V
Pin 6: GND

Modbus signal assignment:
C_1 = D– = A
C_2 = D+ = B

Notes
- Always fit feed pins in pairs!
- Only attach and remove connection cable when de-energised!

Parameterisation

ZTH-GEN

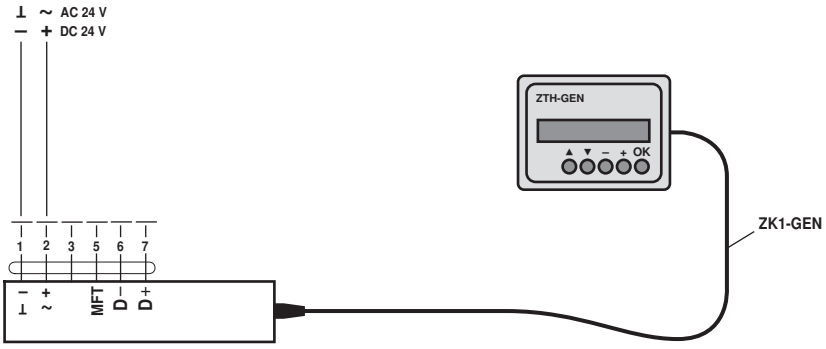

PC tool

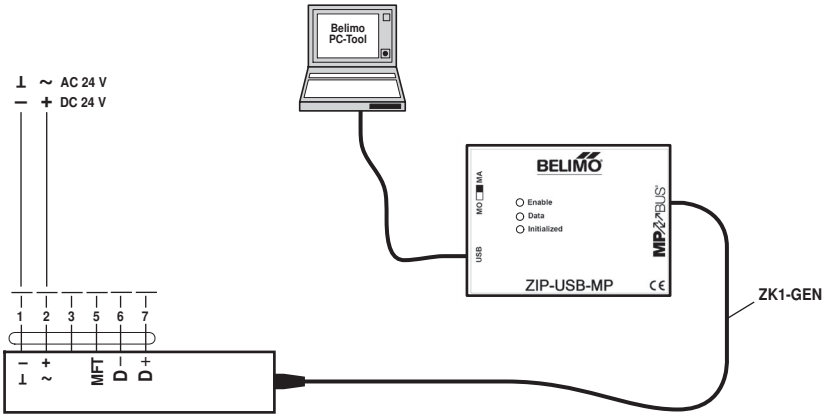

Note
The actuator can be triggered with the PC tool under «PP».

Operating controls and indicators

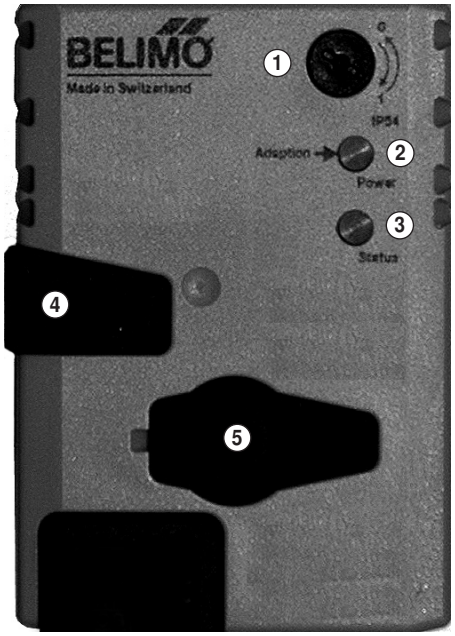

① **Direction of rotation switch**
Switching over: Direction of rotation changes

② **Push-button and LED display green**
Off: No power supply or fault
Illuminated: In operation
Flashing: Address mode: pulses according to set address (1 ... 16) when starting: reset to factory setting (communication)
Press button: in standard mode: switches on angle of rotation adaptation
in address mode: confirmation of set address (1 ... 16)

③ **Push-button and LED display yellow**
Off: The actuator is ready
Illuminated: Adaption or synchronising process active
or actuator in address mode (green LED indicator flashing)
Flickering: Modbus communication active
Press button: in operation (>3 s): switch address mode on and off
in address mode: address setting by pressing several times
when starting (>5 s): reset to factory setting (communication)

④ **Gear disengagement button**
Press button: Gear disengaged, motor stops, manual override possible
Release button: Gear engaged, synchronisation starts, followed by standard operation

⑤ **Service plug**
For connecting parameterising and service tools

Dimensions [mm]

Dimensional drawings

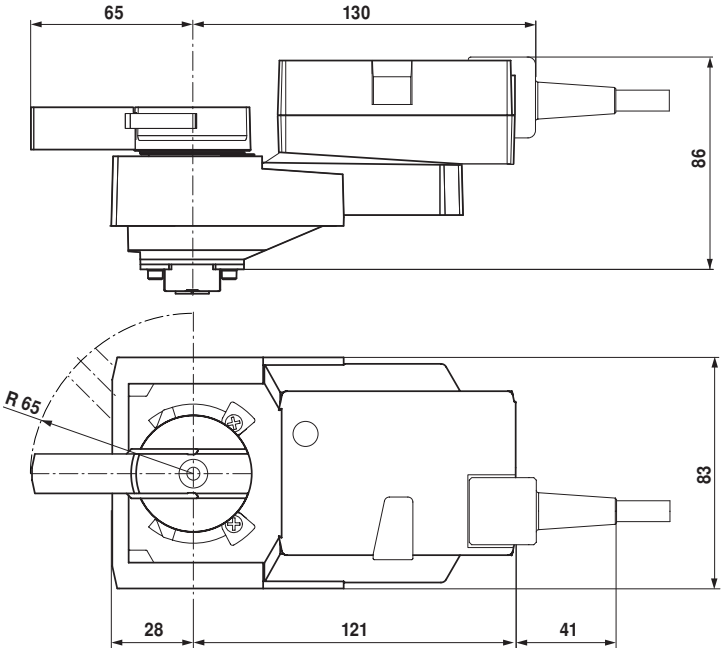

Further documentations

- Overview Valve-actuator combinations
- Data sheets for control ball valves
- Installation instructions for actuators and/or ball valves, respectively
- Notes for project planning (hydraulic characteristic curves and circuits. installation regulations. commissioning. maintenance etc.)

71388-00001.A

1

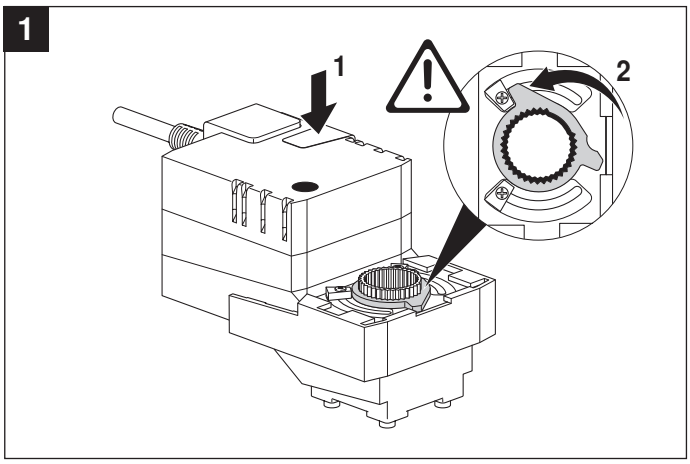

2

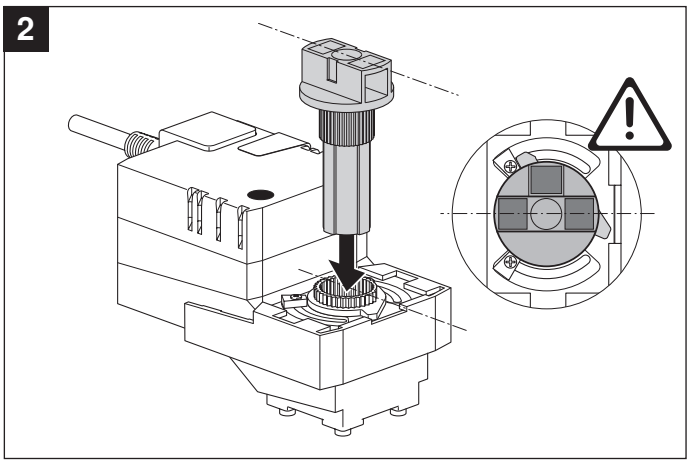

3

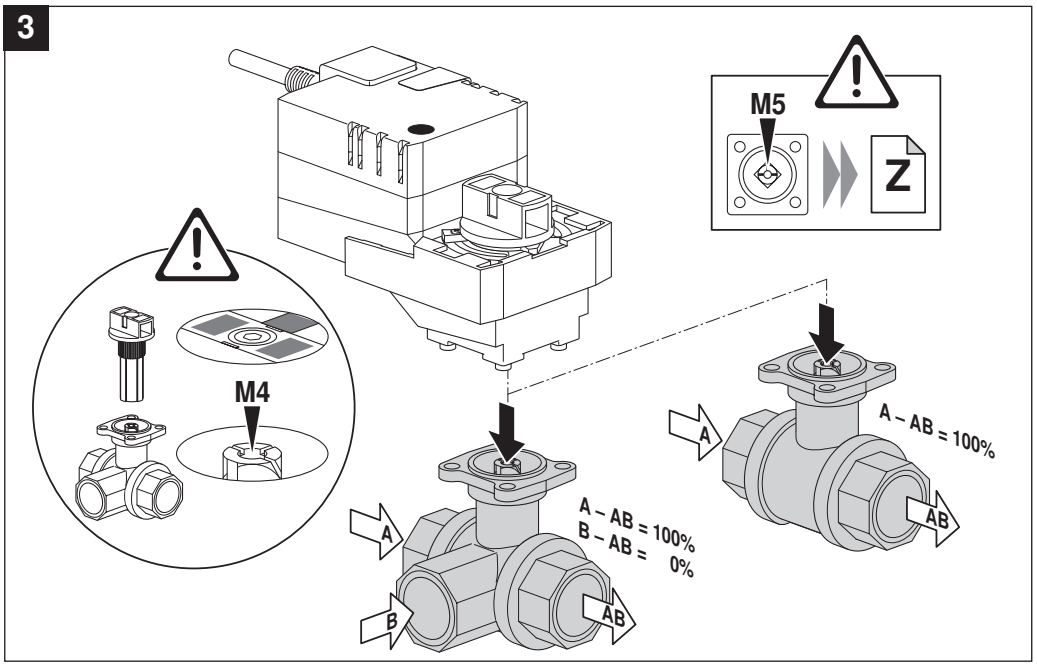

4

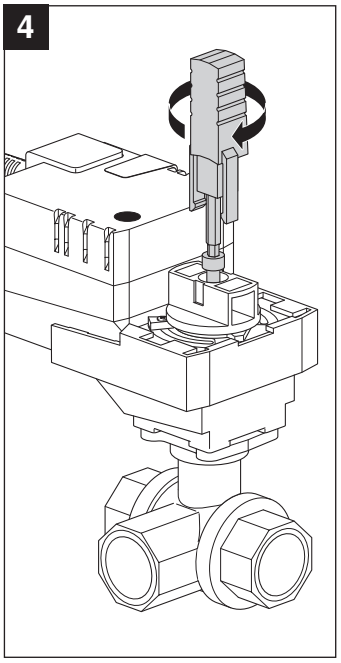

5

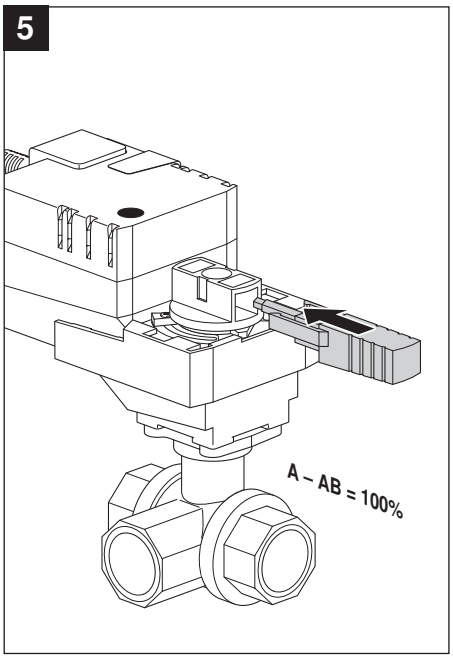

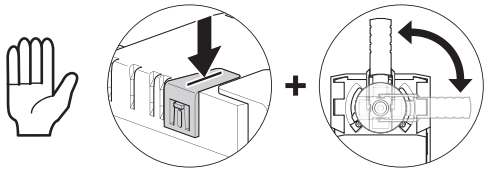

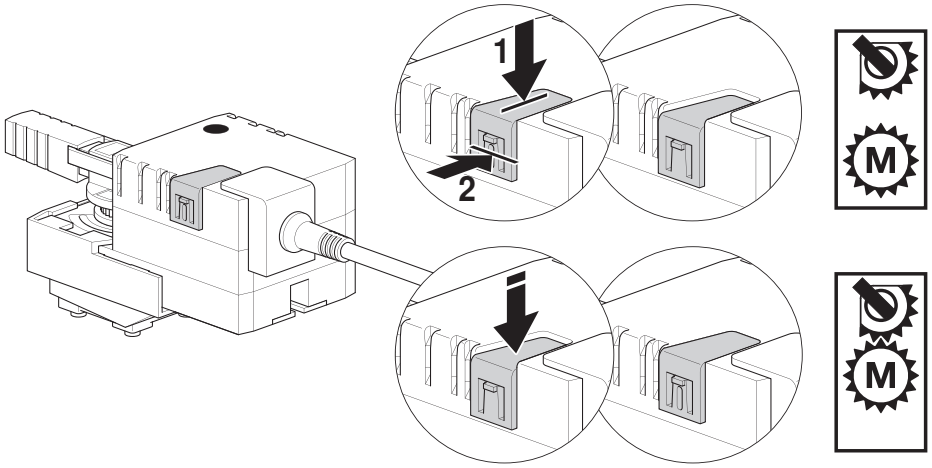

AC 24 V / DC 24 V

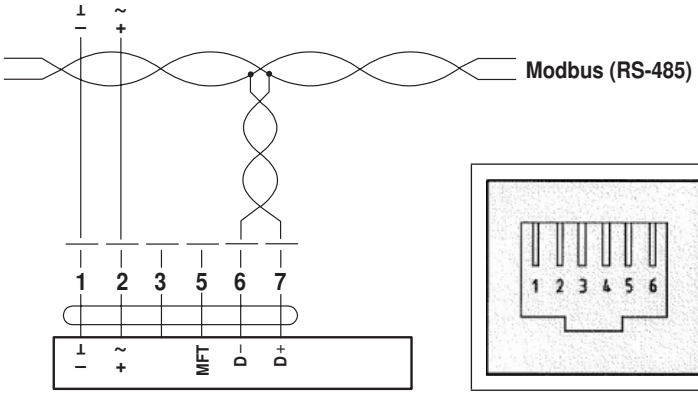

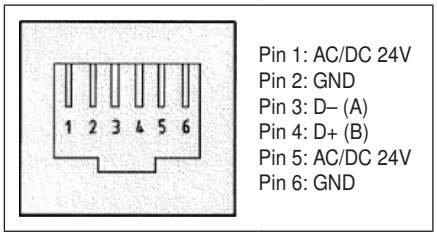

AC 24 V / DC 24 V

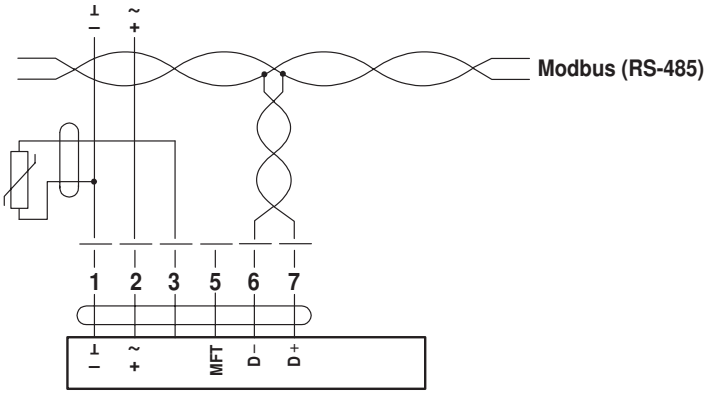

AC 24 V / DC 24 V

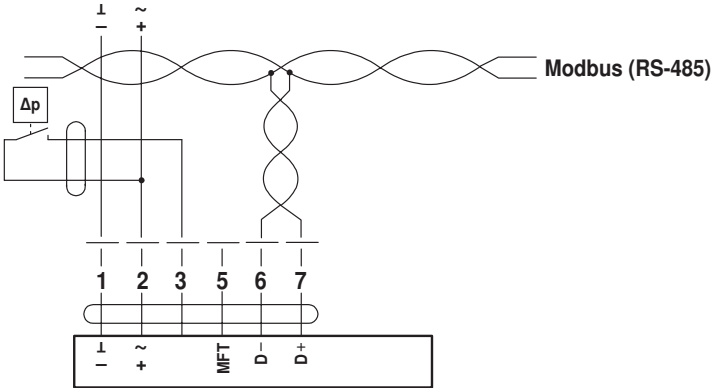

AC 24 V / DC 24 V